Smartphone Magnetic Neck Mount

磁吸手机挂脖

Recommend usage methods
推荐使用方式

In complex environments, water environments, or high-intensity exercise scenes such as running and jumping, it is essential to use magnetic phone cases combined with a safety cord. This includes, but is not limited to, activities such as fishing, mountain biking, crowded attractions, running, skateboarding, etc.

在复杂环境，涉水环境，或者跑跳等高强度运动场景下，**请务必搭配磁吸手机壳+安全绳使用**；包括但不限于钓鱼，山地骑行，人多的景

点, 跑步, 滑板等。

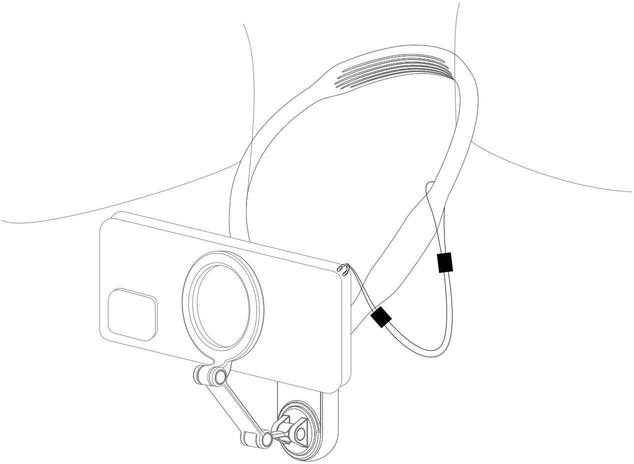

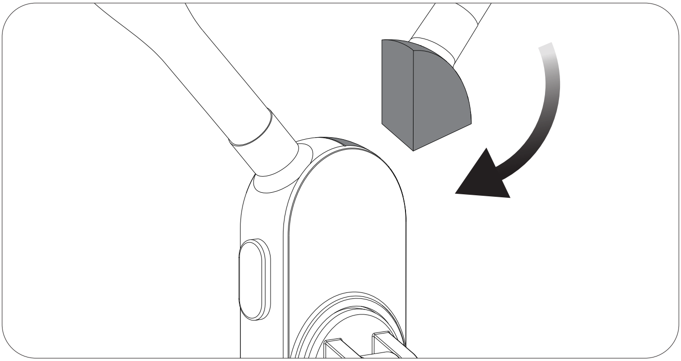

❶ Wear 佩戴

Insert the lock latch from top to bottom

将挂脖锁扣从上往下插入安装

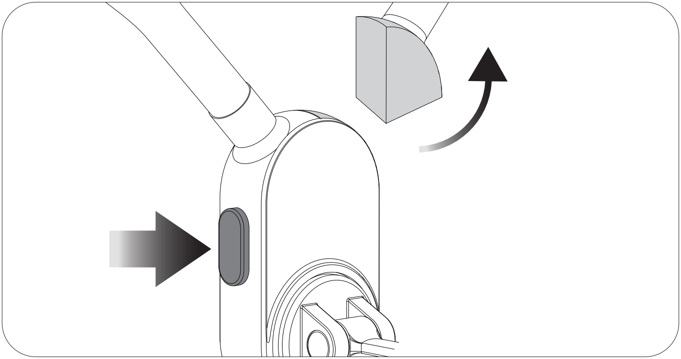

❷ Unlock 解锁

Press the button on the right to unlock the lock latch

按压右面按钮解锁挂脖锁扣

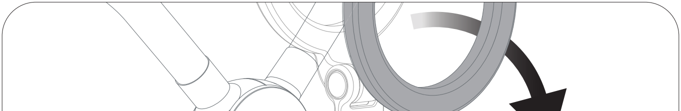

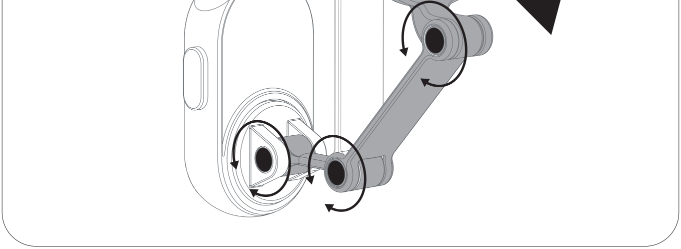

❸ Adjustment 调节支架

Adjust the stand to a suitable angle

将支架调节到合适角度

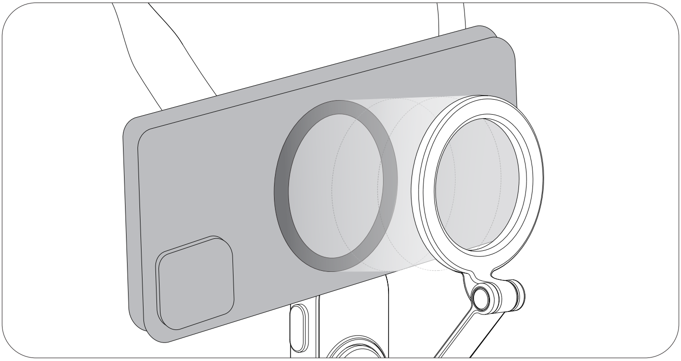

❹ Mounting 安装手机

Attach the magnet ring to iPhone's magsafe area

将苹果手机放置在磁环上

Note 注意

This bracket is suitable for use with Apple 12 and above models. If your phone is not one of these models, or if you want to use a case with it, you can choose one of the following two options:

1. Universal metal ring

Choose a phone case with a smooth and flat surface, stick the metal ring on it, press slightly, then wait for 12 hours before using it. Oily materials in the phone case will affect stickiness, such as liquid silicone-type or phone cases with patterns, so they are not recommended. It is forbidden to directly stick the metal ring on the back of the naked phone!

2. Wearable magnetic suction case

It is recommended to use a TELESIN phone case.

* This magnetic attachment product should not be used in high-speed/high-impact complex environments to prevent any possible loss. The warranty period for this product is 6 months.

该支架适用于苹果12及以上手机使用，如果您的手机非以上机型，或者想带壳使用，可以选择以下两种方案:

1. 选用引磁片

选择表面光滑平整的手机壳，将金属环贴在上面，轻轻按压，然后等待12小时后再使用，手机壳中的油性材料会影响粘度，如液态硅胶型或有图案的手机壳，所以不建议使用。禁止将金属环直接贴在裸机背面!

2. 戴磁吸壳使用

建议使用泰迅手机壳。

* 此磁吸类产品请勿在高速/高冲击等复杂环境下使用，以免掉机。本产品质保期为6个月。

How to use the metal ring

引磁片使用方法

After the metal ring is pasted, please rest for 12 hours before using the magnetic suction function. Please align the metal ring with the magnetic ring when using it; if there is a deviation, the suction force will drop sharply.

粘贴好金属环后, 请静止12个小时后再使用磁吸功能。使用时, 请将引磁片对准磁环; 如发生偏位, 则吸力锐减。

✓

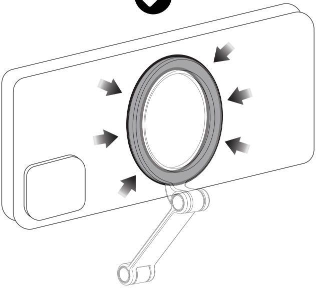

✕

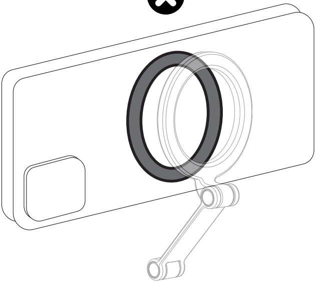

Disclaimer 免责声明

Please read this statement carefully and by using this product you will be deemed to have acknowledged and accepted it in full. Please check the product carefully before each use and do not use it if damaged or deformed. By using this product, you acknowledge and agree that you are fully responsible for your actions and the possible consequences of using this product.You undertake to use this product only for legitimate and lawful purposes. You understand and agree that ("Telesin") shall not be liable for any misuse, adverse effects, damages, injuries, penalties or other legal consequences arising directly or indirectly from the use of this product. The user should follow the precautions including but not limited to those mentioned herein. To the extent Telesin reserves the right to interpret and modify this commitment within the limits of national laws and regulations.

请仔细阅读本声明，一旦使用本产品，即视为对本声明的全部认可和接受。每次使用前，请仔细检查产品，若出现破损、变形，请勿使用。使用本产品，就意味着您认可并同意，您将对使用本产品的行为和可能产生的后果负全部责任。您承诺仅会出于正当合法的目的使用本产品。您理解并同意，对于直接或间接因使用本产品而造成的滥用、不利影响、损害、伤害、惩罚或者其他法律后果，泰迅数码有限公司（以下简称“Telesin”）将不承担任何责任。用户应遵循包括但不限于本文提及的使用注意事项。在国家法律法规范围内，本承诺解释权、修改权归 Telesin 所有。